TEMPLATE IS SET AT 10% SCALE

3x4.5 Rhino Gazebo - Standard Pro Kit

TEMPLATE IS SET AT 10% SCALE

OUTSIDE OF THE GAZEBO - LEFT SIDE

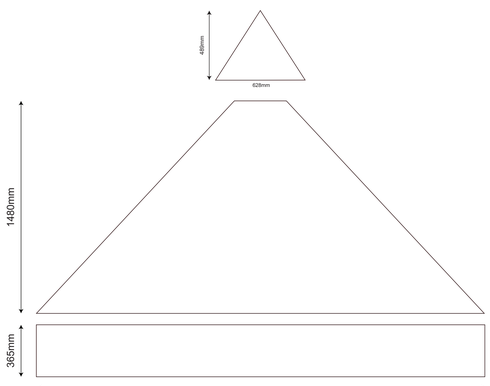

OUTSIDE OF THE GAZEBO - RIGHT SIDE

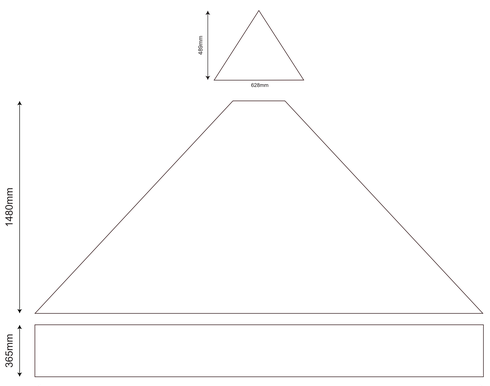

OUTSIDE OF THE GAZEBO - BACK SIDE

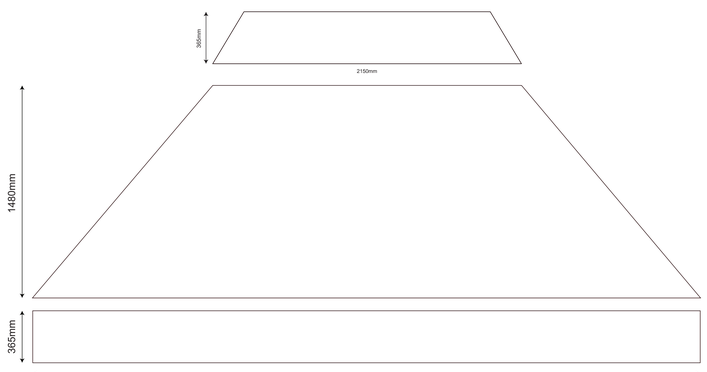
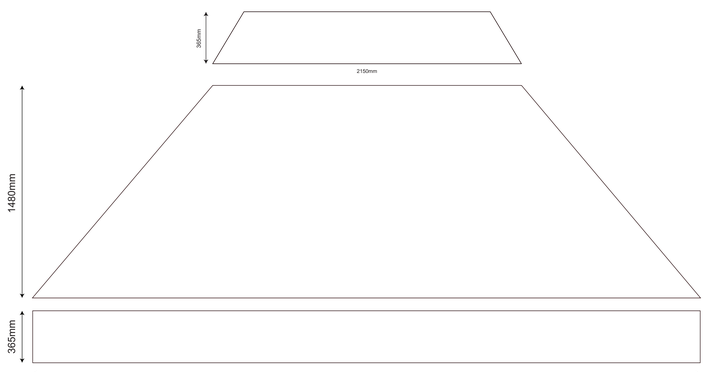
OUTSIDE OF THE GAZEBO - FRONT SIDE